INSTALLATION, USE AND MAINTENANCE

SAFETY **4**
INSTALLATION **14**
MAINTENANCE **32**

TECHNICAL DOCUMENTATION IN DIGITAL FORMAT

To download the documentation and full user manual in digital format: **http://cadco-ltd.com**

- product code
- serial number

Both can be found on the ratings plate on the side of the oven (page **23**).

Dear Installer and Customer,

This manual contains all the information you need to use, install and maintain this appliance correctly.

Please read it carefully before assembling the appliance and store it safely for future reference.

If you do not fully understand any of the contents, please contact the manufacturer for further information.

Cadco Ltd.
200 International Way
Winsted, CT 06098

Hours
8:30am - 5:00pm (Eastern) Monday through Friday

Phone:
(860) 738-2500
Fax:
(860) 738-9772

General Email Address:
info@cadco-ltd.com

Safety

Pictograms 4

Safety information for installing the appliance 5

Safety information for maintaining the appliance 8

PICTOGRAMS

Read the instruction manual

Danger! Situation presenting immediate danger, or a hazardous situation which could cause injury or death.

Risk of fire!

Risk of electric shock

Risk of burns

Electromagnetic radiation: do not open the compartments marked with this symbol

Tips and useful information

Consult another section

Earthing symbol

Equipotential symbol

SAFETY INFORMATION FOR INSTALLING THE APPLIANCE

General precautions

- WARNING: Read this manual carefully before installing the appliance. Store this manual carefully for future reference.
- WARNING: Failure to comply with the safety regulations, and any installation or maintenance other than those indicated in this manual voids the warranty* and relieves the manufacturer of all liability.
- WARNING: Interventions, tampering or modifications which have not been expressly approved and which do not comply with the instructions in this manual could cause damage, injury or death, and void the warranty*.
- WARNING: All non-routine maintenance must be performed exclusively by qualified technicians, authorised by the manufacturer, in compliance with the regulations in force in the user country and the regulations on systems and safety in the workplace.
- WARNING: Before starting any installation or maintenance work, disconnect the appliance from the electrical power supply and make sure that any hot parts of the machine have cooled to room temperature.
- WARNING: During installation and maintenance operations, personal protective equipment (PPE) must be used, such as protective gloves, safety shoes and dust-proof filter masks.

- WARNING: When the appliance is being fitted, people not involved with the installation may not pass through or occupy the work space.
- WARNING: The appliance must be transported using suitable means for the weight and size of the appliance. Please use personal protective equipment (PPE – gloves, safety shoes, etc.).
- WARNING: The packaging material is potentially dangerous. It must be kept out of the reach of children and animals, and correctly disposed of in compliance with local regulations.
- WARNING: The ratings plate provides essential technical information that is of utmost importance for any appliance maintenance or repairs. Do not remove, damage or modify the plate.
- WARNING: The parts protected by the manufacturer or one of its agents cannot be altered by the installer.
- WARNING: If the door or seal are damaged, do not use the oven until it has been repaired by a technician.
- WARNING: The appliance must be easily movable for any non-standard maintenance work. Make sure that any building work carried out following installation (e.g. building walls, replacing doors with narrower models, renovation work) does not hinder movement.
- WARNING: Instructions are available on the website.

Warnings for the electrical connections

- WARNING: Before installing the appliance, check that the systems are compliant with the installation standards in the specific country and with the specifications indicated on the appliance serial plate.
- WARNING: The electrical system has been designed in accordance with regulations IEC 60335-1 and IEC 60335-2-42 as regards the electrical safety of appliances for commercial and domestic use.
- WARNING: Connections to the power mains must comply with the regulations in force in the country where the appliance is installed.
- WARNING: The appliance must be connected directly to the power supply and must be fitted with an easily accessible switch, installed in the system in accordance with the regulations in force in the country in which the appliance is being installed. This switch must separate all pole contacts so as to guarantee complete disconnection in overvoltage category III conditions.
- WARNING: There must be an earth connection made using a single, seamless cable, without interruptions (including the circuit breaker). The yellow/green earth wire must be at least 3 mm longer than the other wires.
- WARNING: Each appliance must be included in an equipotential bonding system that complies with the regulations in force in the country where the appliance is installed.
- WARNING: The power supply cable must only be replaced by a qualified, authorised technician. The cable can only be replaced by a cable with the same characteristics with a yellow and green earth connection.

SAFETY INFORMATION FOR INSTALLING AND MAINTAINING THE APPLIANCE

General precautions

- WARNING: Please read this manual carefully before using and maintaining the appliance.
- WARN ING: Failure to comply with the safety regulations, and any use or maintenance other than those indicated in this manual voids the warranty* and relieves the manufacturer of all liability.
- WARNING: Children must be supervised to ensure they do not play with the appliance.
- WARNING: User cleaning and maintenance must not be carried out by children.
- WARNING: These appliances are intended to be used for commercial applications, e.g. in restaurant kitchens, canteens, hospitals and commercial enterprises such as bakeries, butchers, etc., but not for continuous, mass production of food. Any use other than has been indicated is considered improper, potentially dangerous for people and animals, and may irreparably damage the appliance. Improper use of the appliance voids the warranty.
- WARNING: If the appliance is not working or if you notice any changes to the structure or operation, disconnect the electricity supply and contact Cadco customer assistance service. Do not attempt to repair the appliance yourself. For any repairs, please request Cadco original spare parts.

* For further information, ▶ go to www.unox.com under the "Warranty" section

- WARNING: To ensure that the appliance is in perfect condition in terms of use and safety, maintenance and inspections should be performed at least yearly by an authorised support service centre.
- WARNING: The appliance emits a sound level of below 70 dB.

Risk of burns and injury

- WARNING: While cooking and until all appliance parts have cooled, make sure to only touch the appliance control components or handle, because the external parts are extremely hot (temperature must be below 50°C | 122°F).
- WARNING: Cooking can only take place with the door closed, for safety reasons.
- WARNING: In order to maintain optimum performance, do NOT open the door during cooking. If it is not possible to avoid opening the door, please do so very slowly and carefully, paying attention to the hot steam coming out of the oven cavity.
- WARNING: Wear appropriate protective thermal clothing and exercise extreme caution when moving containers, accessories and other objects inside the oven cavity.
- WARNING: DO NOT put highly flammable or heat-sensitive objects (e.g. plastic ornaments, lighters, etc.) near the appliance.

- WARNING: The first time you use the appliance, some of the oils used for manufacturing may evaporate and produce fumes or unpleasant odours. These will gradually disappear as you continue to use the appliance.
- WARNING: Liquids or other foods should not be reheated in sealed containers, as these may explode.
- WARNING: To avoid burns, do not use containers filled with liquids or products that liquefy, heating up to higher levels than can be easily observed (IEC 60335-2-42: 2002 / AMD1: 2008).
- WARNING: The contents of any baby bottles or jars of baby food must be mixed or shaken, and the temperature checked before consumption, to avoid scalding.

Risk of fire

- WARNING: Before using the appliance, make sure that there are no non-compliant objects (instruction manuals, plastic bags, etc.) or detergent residues inside the oven cavity. Also make sure that the flue is free of obstructions and that there are no flammable materials in the vicinity.
- WARNING: When reheating food in plastic or paper containers, check the oven. Risk of fire.

- WARNING: If you notice any smoke coming from the appliance, switch off or remove the appliance plug and keep the door closed to extinguish any flames.
- WARNING: Do not place sources of heat (grills, fryers, etc.), highly flammable substances or fuels (diesel, petrol, bottles of alcohol, etc.) near the appliance.
- WARNING: Clean the oven daily, removing any food residue. Follow the detailed cleaning instructions on page 34. Failure to clean the oven could cause the surfaces to deteriorate. This could reduce the life of the appliance and cause danger (if not removed, fats or food residue on the inside could catch fire).
- WARNING: Do not use highly flammable food or liquids while cooking (e.g. alcohol).
- WARNING: Do NOT clean using flammable detergents or detergents with potentially flammable substances. Only use Cadco SPRAY&Rinse or warm soapy water.

Risk of electric shock

- WARNING: Do not open the compartments marked with these symbols. Only qualified personnel authorised by UNOX may access these compartments. Failure to observe this regulation invalidates the warranty* and may cause damage or injury including death.
- WARNING: Any routine maintenance must be performed:
  - after waiting for the appliance to cool down fully;
  - only if you are in good mental and physical condition, and are wearing suitable personal protective equipment (e.g. heat-resistant rubber gloves, eye protection, dust mask (optional), etc.).
- WARNING: Do not clean the outside of the appliance with steam or pressurised water jets.

The manufacturer reserves the right to make changes to improve the appliances and accessories at any time without advance notice. Full or partial reproduction of this manual is forbidden without the consent of the manufacturer. The measurements provided are approximate and not binding. In the event of disputes, this document was originally written in English. The manufacturer is not responsible for any translation/interpretation errors.

Installation

for qualified installers only

Transporting the appliance	14
Unpacking the appliance	16
Checking package contents	18
Getting started	19
Positioning	20
Collegamento elettrico	14
Flue connections	28

TRANSPORTING THE APPLIANCE

03 The appliance must be transported:

- in full compliance with laws on accident prevention and the regulations in force;
- by authorised and trained personnel in good physical and mental condition, equipped with PPE (personal protective equipment);
- after making sure there are no people or things in the manoeuvring area that could get in the way;
- after making sure the packaging fits easily through the doors.
- after making sure that the floor is perfectly smooth, level and even, as well as being able to bear the load. The floor must not be slippery.

⚠ The manufacturer shall not be held liable for any inconvenience caused by transportation carried out in any other conditions.

During transportation or storage, the appliances must NOT be stacked.

The appliances must NOT be moved manually, with straps, or by dragging or pushing them.

If the packaging is visibly damaged, promptly contact the manufacturer. DO NOT install the appliance.

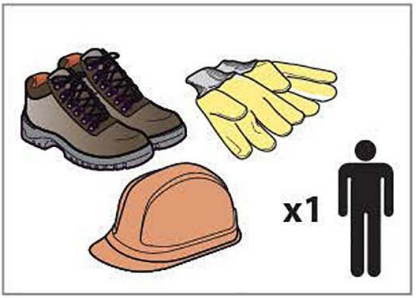

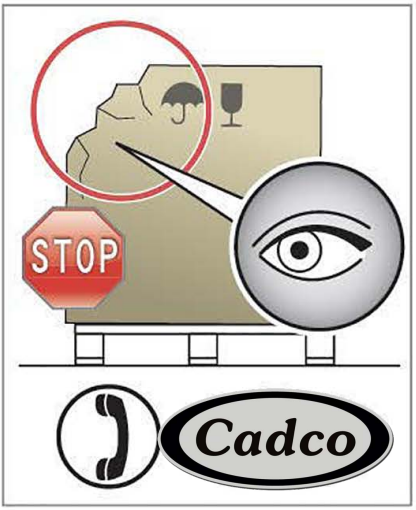

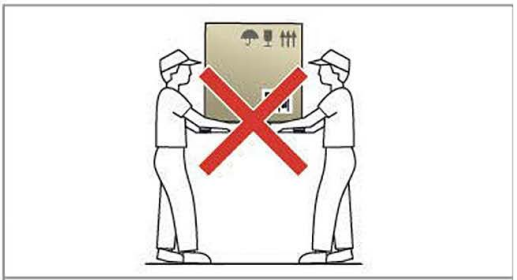

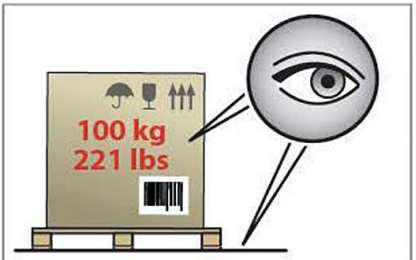

01

UNPACKING THE APPLIANCE

02 After unpacking the appliance, check for any visible damage. If it is damaged, promptly contact the manufacturer and DO NOT install the appliance.

⚠ The packaging material is potentially dangerous. It must be kept out of the reach of children and animals, and correctly disposed of in compliance with local regulations.

NON-STOP Efforts

Cadco has, for years, adopted the philosophy of increasing the environmental compatibility of its products, and reducing energy consumption and waste. UNOX wishes to protect the environment and invites the consumer to dispose of waste in recycling bins.

A | Technical data table

Tray	**342x242**	**460x330**	
	BLC-003	BLC-013	BLC-113
Humidity	NO	NO	YES
No. trays	3	3	3
Voltage [V]	120	120	120
Phase	single-phase		
Tot. elect. power [kW]	1.45	1.45	1.45
Heating power [kW]	1.35	1.35	1.35
Plug	Nema 5-15P	Nema 5-15P	Nema 5-15P
Size [W x H x D mm - in]	480 x 466 x 550 18.9 x 18.4 x 21.6	600x466x611 23.6 x 18.4 x 24	

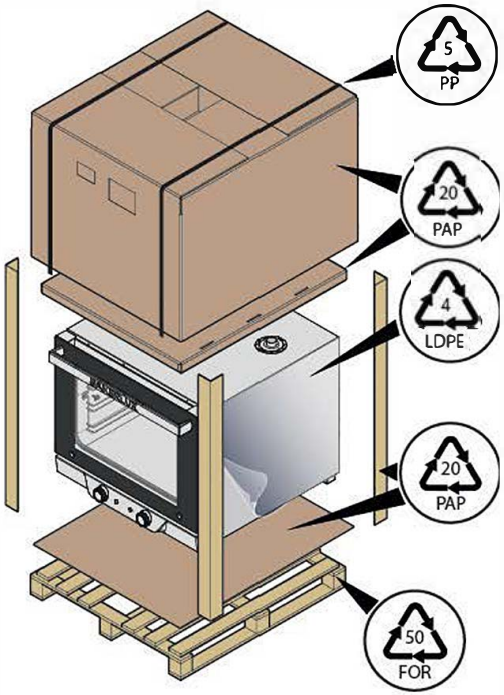

02

460x330		600x400	
BLC-023	BLC-133	BLC-183	BLC-193
NO	YES	NO	YES
4	4	3	3
208-240	208-240	208-240	208-240
single-phase			
2.2-2.9	2.5-3.3	3.9-5.1	4.5-5.9
2.1-2.8	2.4-3.2	3.6-4.7	4.2-5.6
Nema 6-15P	Nema 6-20P	Nema L6-30P	Nema L6-30P
600 x 546 x 611 23.6 x 21.5 x 24		800 x 542 x 714 31.5 x 21.3 x 28.1	

CHECKING PACKAGE CONTENTS

03 ▶ Before installing the appliance, check that the following components are included in the package and are undamaged:

- BAKER LUX CLASSIC™ oven;
- trays 13.46 x 9.53 IN | 18.11 x 12.99 in | 23.62 x 15.75 in, the quantity de-pends on the model;
- technical documentation (use and installation manual, "Technical specifications" sheet);
- oven positioning feet;
- yellow "Risk of liquid spillage" label.

⚠ If a component is missing or damaged, do not install the appliance. Please contact the manufacturer.

⊕ The BAKERLUX CLASSIC™ range also includes various professional accessories. Please contact Cadco for additional information.

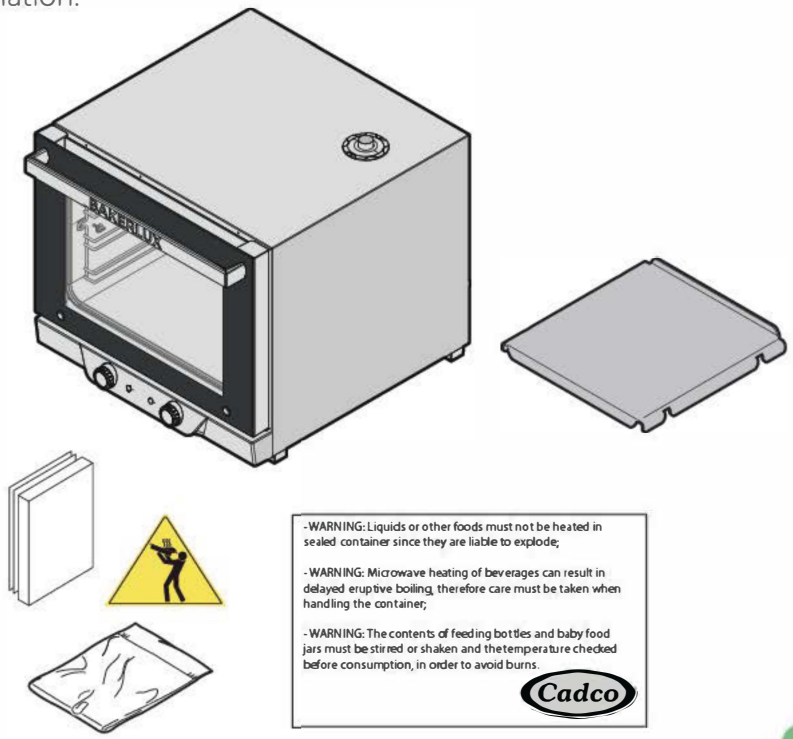

03

GETTING STARTED

04 Removing the protective film

Slowly remove the protective films from the appliance. Clean any glue residue with appropriate solvents without using tools, abrasive detergents or acids that could spoil the surfaces.

⚠ The protective films are potentially dangerous and must be kept out of the reach of children and animals, and correctly disposed of in compliance with local regulations.

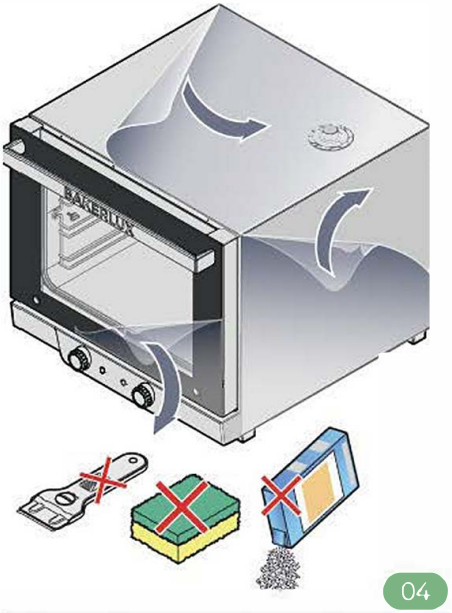

04

05 Appliance labels

For safety reasons, the last tray should NOT be placed above 63". Should you need to do this, the label on the side of the appliance indicates that you must exercise caution when removing trays from the oven cavity, as they may contain boiling hot cooking liquids.

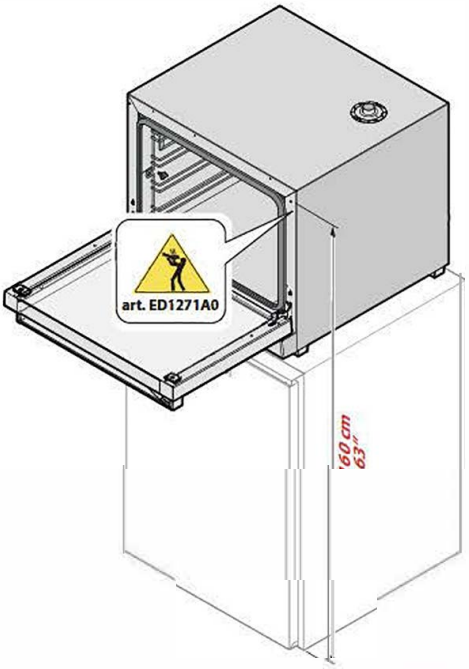

05

POSITIONING

06 The installation area

Install the appliance in areas that:

- specific for this purpose and compliant for cooking industrial foods;
- that are adequately ventilated;
- that comply with the laws in your country regarding system safety/ safety in the workplace;
- protected from the weather;
- with temperatures from +5°C | 41°F to +35°C | 95°C maximum;
- that have maximum humidity of 70%.

The floor or structure beneath the appliance must:

- be flame and heat resistant;
- be perfectly level;
- have a flat and even surface;
- be able to support the weight of the appliance at full load without deforming or undergoing structural failure.

For additional technical information on the appliance, please see the “Technical specifications” sheet provided with the appliance.

07 Installation clearance

Position the appliance respecting the clearance indicated in the figure and so that the back of the appliance is easily accessible for making the necessary connections and for maintenance work. The appliance is not suitable for recessed installation.
Do not install the appliance near:

- other appliances that reach high temperatures;
- easily flammable or heat-sensitive materials, walls or furniture.

If this is not possible, a fireproof panel must be installed in accordance with local fire prevention regulations.

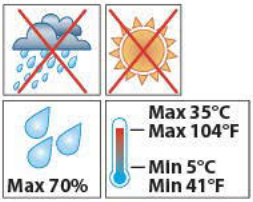
Max 70%
Max 35°C
Max 104°F
Min 5°C
Min 41°F

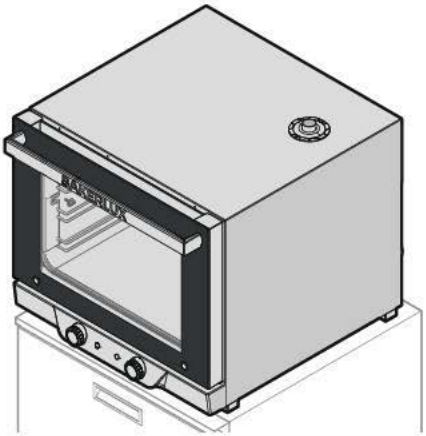

06

07

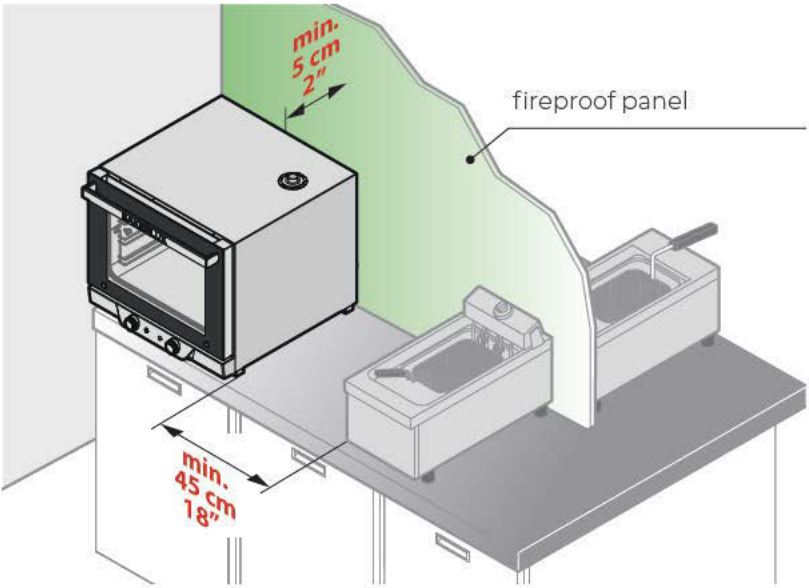
min.
5 cm
2"
fireproof panel
min.
45 cm
18"

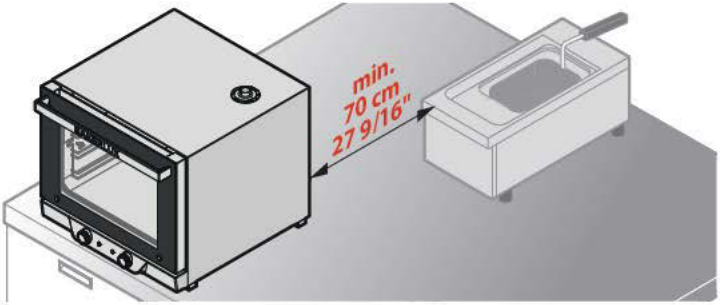
min.
70 cm
27 9/16"

Positioning

NEVER install the appliance on the floor. It must be positioned:

- on a structure (e.g. neutral cabinets)
- on an Cadco stand (with or without castors);
- on a Cadco proofer.

The feet must be mandatorily installed on the equipment (they are supplied inside the packaging). DO NOT operate the equipment without the feet installed. Insert the snap-in feet as shown in the figure. ▶ 08.

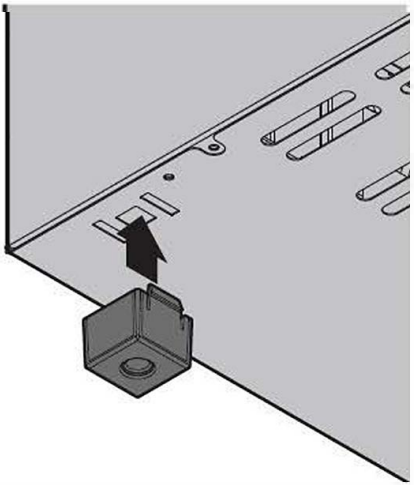

08

09 ▶ positioning: customer's own substructure

Before securing the appliance to a structure, always check it is perfectly level using a manual or digital spirit level.

Any structures used must be:

- stable and perfectly level;
- immovable;
- suitably sized for the appliance requiring support;
- heat resistant and NOT flammable;
- able to support the appliance weight at full load without deforming or experiencing structural failure.

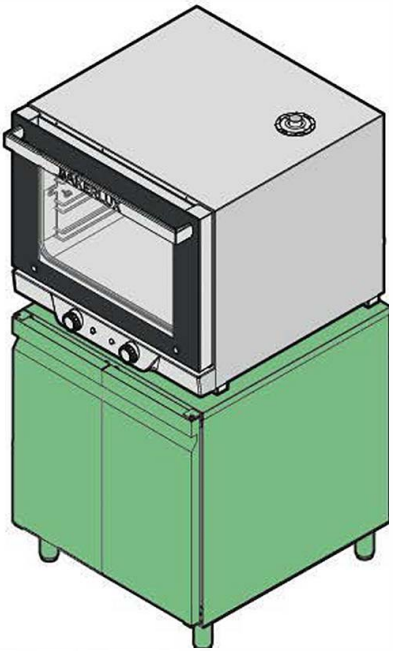

positioning on a substructure

09

Electrical connections

Before installing the appliance, read chapter "Safety information for installing the appliance" on page **4** carefully.

Connections to the mains power and the electrical system must comply with the regulations in force in the country where the appliance is installed. All connections must be made by qualified personnel authorised by Cadco. Failure to comply with these regulations may cause damage and injuries, invalidates the warranty* and relieves Cadco of all liability.

Each appliance must have its own power socket. Do not use adapters or extension cords. If the power cable is already fitted to the appliance, it cannot be extended or joined in any way. Do not roll up the cable if it is too long. Ensure the cable is not pinched, squashed or a tripping hazard for anyone passing by.

10 Before connecting the appliance to the mains electricity, always compare the power supply data with the appliance data as specified on the ratings plate.

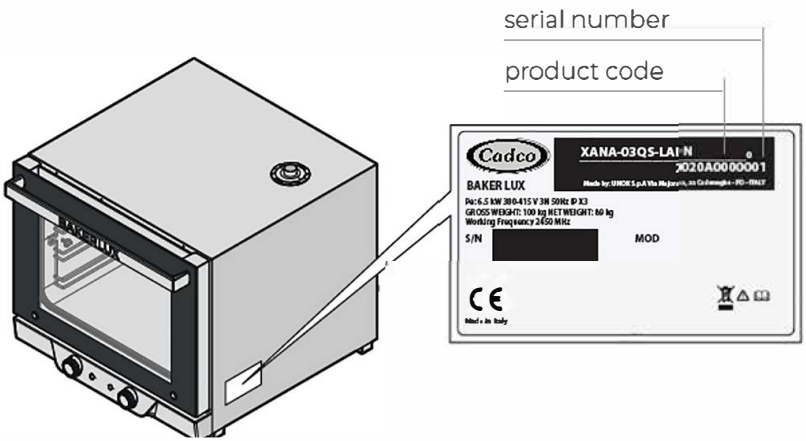

In order to avoid hazards due to the accidental resetting of the thermal cut-out, this appliance must not be powered with an external switching device, such as a timer, or be connected to a circuit that is regularly switched on and off by the utility.

The cable must be replaced by Cadco technical assistance service or, in any case, by a person with a similar role in order to prevent any risks.

The wiring diagrams, cable specifications and technical data are indicated on the "Technical specifications" sheet (Power supply - Connection Diagram) supplied with the appliance.

Appliance with a Nema plug

The appliance is released from the factory with the power cable and plug already connected to the terminal. Do not make any other type of electrical connection or dimensional modification to the cable other than extensions, replacing it only with a cable with the same specifications as the original factory cable (type of rubber, cross-section, etc.).

Checks

- The copper jumper and the electrical cable must be secured together under the screw, in the direction of its tightening. Carefully tighten the electrical connections before connecting the appliance to the power mains.
- Check for any electrical dispersion between the phases and the earth, and for electrical continuity between the external casing and the mains earth.
- Check that the power supply voltage does not deviate from the nominal voltage specified on the appliance ratings plate when the appliance is operating. If it does, wire the phases as specified on the "Technical specifications" sheet supplied.

Adapting to different voltages

For electrical and voltage requirements that differ from standard values, replace the power supply cable and connect the new cable to the terminal board, following the diagrams on the "Technical specifications" sheet (Power supply - Connection Diagram) supplied with the appliance.

Replacing the power supply cable

The cable must be replaced by Cadco technical assistance service or, in any case, by a person with a similar role in order to prevent any risks.

Follow the procedures below to replace the power supply cable:

- open the terminal board cover by releasing the two lower flaps;
- remove the cable installed by detaching it from the terminal board;
- see the "Technical specifications" sheet (Power supply - Connection Diagram) which shows all of the possible wiring diagrams and the new cable spec according to the chosen connection (Cable Type);
- secure the new cable;
- close the terminal board cover.

Plumbing connections

Water connection: incoming water

11 ▶ The appliances w/humidity connect to the water mains.

Inside the oven there is a solenoid valve, already installed at the factory.

⚠ Use the set of new couplings (provided with the appliance) to connect the appliance to the water mains. Do not re-use previously used couplings.

Before connecting the water pipe to the appliance, flush out the pipe with water to eliminate any residues. A shut-off valve should be positioned between the water mains and the appliance.

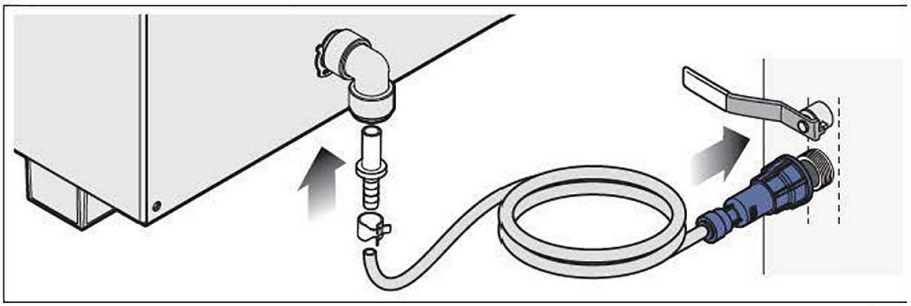

11

Inlet water characteristics

The incoming water must:

- have a maximum temperature of 86° F;
- be drinkable;
- be pressured at between 21.8 psi and 87.0 psi | 150 kPa and 600 kPa (29 psi | 200 kPa recommended).

⚠ The incoming water supply must be free from chloramine or have a level below 0.1 ppm (mg/L). Note: any damage caused by excess chloramine is not covered by the warranty.

Indicator for assessing corrosion probability

FLUE Cooking produces hot fumes and odors that are evacuated through an outlet pipe on the top of the appliance.

⚠ Always make sure that there are no objects and/or materials obstructing the flue or which may be damaged by the temperature or fumes. Do not leave flammable materials near the flue.
If you are cooking any of these types of food (chicken, raw bacon, raw sausages, steak), check your local HVAC codes or contact your local authority to ensure you comply with ventilation requirements.
For these types of food, the fumes can be evacuated by means of an extractor hood of suitable capacity and size for the type of appliance.

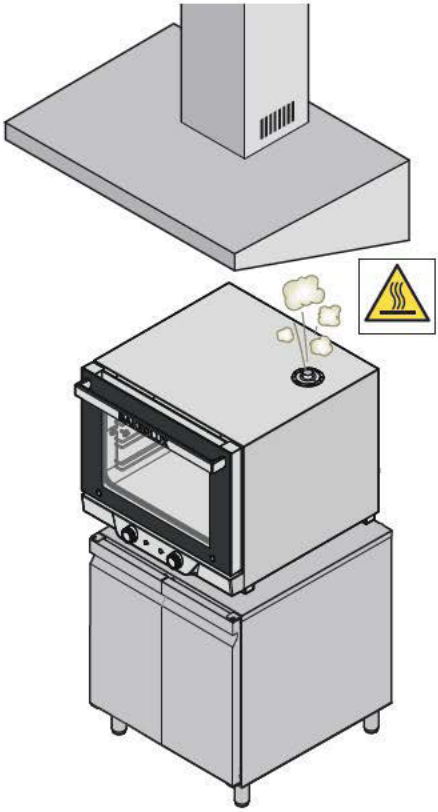

12

Use

USING THE OVENS

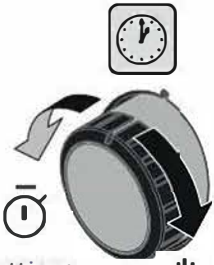

Time setting: from 0 to 60 minutes

Continuous operation

Temperature setting: from 32° to 500°F

Warning LED: it turns on when the timer is set.

Warning LED: it turns on when the oven is heating and turns off when it has reached the correct temperature

USING THE OVENS WITH A STEAM GENERATOR

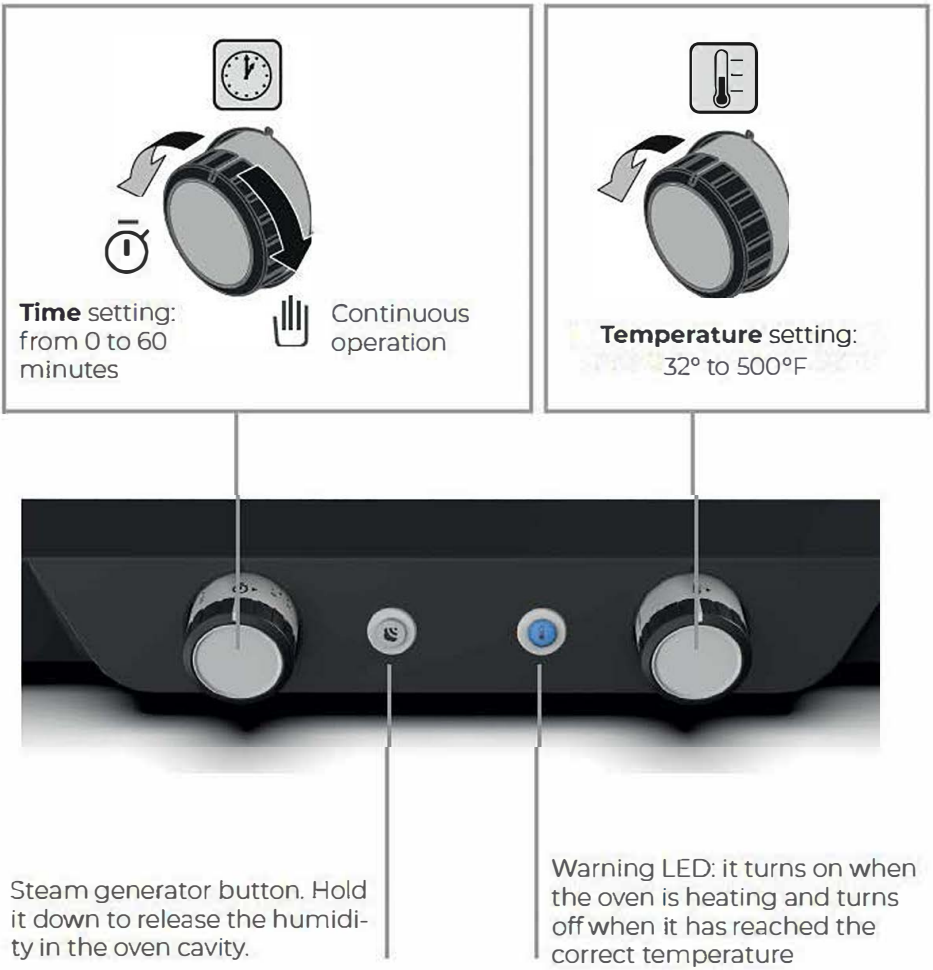

Maintenance

Safety information for maintaining the appliance 32

Inactivity 36

Disposal 36

SAFETY INFORMATION FOR MAINTAINING THE APPLIANCE

Any routine cleaning procedure must be performed:

- in perfect psychophysical shape
- after disconnecting the appliance from the power and water supplies;
- after having put on the proper personal protective equipment (e.g. rubber gloves, etc.).

Clean the appliance on a daily basis in order to maintain a good level of hygiene and to prevent the stainless steel from corroding or deteriorating.

Daily cleaning also reduces the possibility of accumulated fatty substances or food residues inside the cavity catching fire and becoming a fire hazard.

When cleaning any component or accessory NEVER use:

- abrasive, pointy or sharp tools or cloths (abrasive sponges, scrapers, steel-bristled brushes, etc.);
- steam or pressurized water jets;
- abrasive or powder detergents;

- alkaline, aggressive, caustic or corrosive detergents (e.g. hydrochloric/muriatic or sulfuric acid or caustic soda). These substances could cause permanent damage to the appliance surfaces and catalysts.

⚠ Do not use these substances even when cleaning the appliance substructure or the floor under the appliance. The volatile emissions from these compounds may still cause damage.

ROUTINE MAINTENANCE

13 Cleaning the external surfaces

- Wait for the surfaces to cool off.
- Use only a soft cleaning cloth dampened with a little soap and water.
- Rinse and dry thoroughly.
- Alternatively, only use detergents recommended by Cadco. Other products may cause damage, invalidating the warranty. Read the usage instructions provided by the detergent manufacturer.

Cleaning the oven door's internal and external glass

- Wait for the windows to cool off.
- Use only a soft cleaning cloth dampened with soapy water or a specific glass cleaner.
- Rinse and dry thoroughly.
- 14 For more thorough cleaning, you can open the internal glass as indicated in the figure. After cleaning, lock the internal glass using the brackets.

Cleaning the oven cavity

WARNING: Failure to clean the oven cavity daily as described may cause the accumulated grease and food residues to catch fire – this is a fire hazard.

Follow the procedure below to clean the oven cavity:

- turn on the oven and set the temperature to 55°C | 131°F and the steam to 100%;
- leave the oven running for 10 minutes;
- wait for the surfaces to cool off and clean using a soft cloth;
- rinse thoroughly to remove any residue.

Remove the side grill racks to facilitate cleaning. Clean them with soapy water or a specific detergent (not dishwasher-friendly).

Plastic surfaces and control panel

Use only a very soft cleaning cloth and a small amount of detergent to clean delicate surfaces.

13

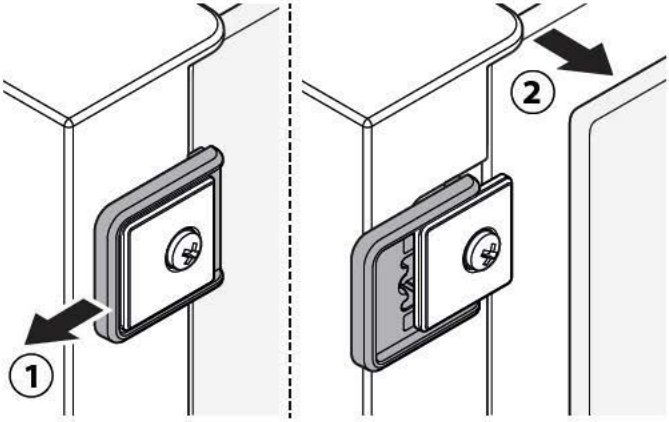

14

INACTIVITY

During periods of inactivity, take the following precautions:

- disconnect the appliance from the power supply;
- preferably rub a soft cloth lightly doused with Vaseline oil on all stainless steel surfaces;
- keep the appliance door slightly ajar.

Before reusing the appliance:

- clean the appliance and accessories thoroughly (see page 34);
- reconnect the appliance to the power supply;
- inspect the appliance before using it again;
- restart the appliance for at least 50 minutes without any food inside and with the microwave set to 0%.

To ensure that the appliance is in perfect condition in terms of use and safety, maintenance and inspections should be performed at least yearly by an authorised support service centre.

DISPOSAL

The directive appliances has been implemented differently by each country. Therefore, if you want to dispose of this appliance, we recommend you contact your local authority or dealer for information on the correct disposal method.